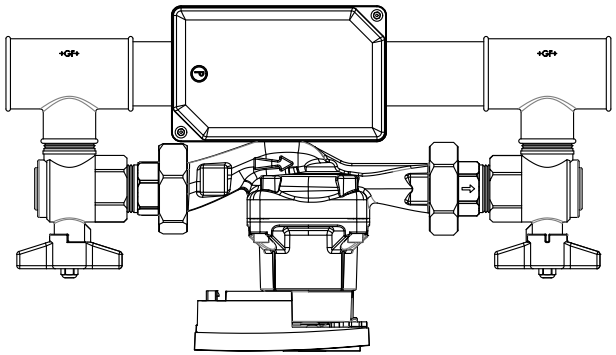

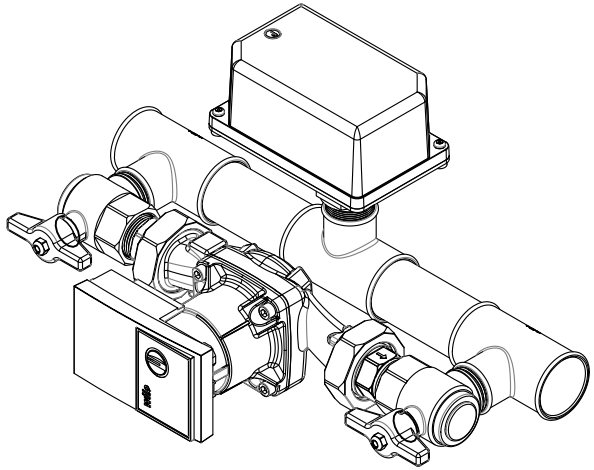

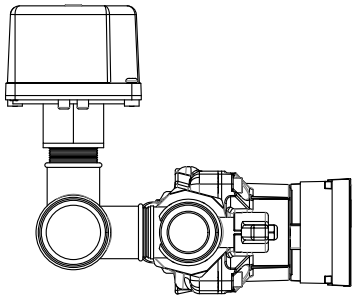

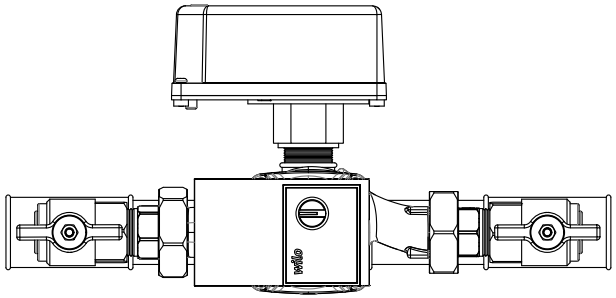

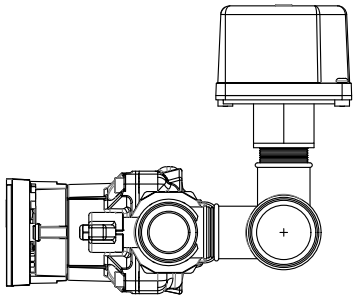

Model shown
ø32

Drawing Specification

THIRD ANGLE PROJECTION
ALL DIMENSIONS IN MILLIMETRES

Copyright. This drawing is property of Project Fire Products Ltd and must not be used or copied without its written permission.
Company Registration Number 364 8507.

Project Fire **Products**
Pasturefields Lane
Pasturefields Industrial Estate
Staffordshire
ST18 0PH
t: +44 (0) 1889 271 271
f: +44 (0) 1889 272 735
e: sales@projectfireglobal.com
w: www.projectfireglobal.com

projectfire
innovators in fire protection

ZONECHECK RESIDENTIAL Ø25-40			
SCALE	NTS	MODEL	ISSUE NO
DRAWN	AF	ZC-R-TD	004
DATE	03/04/19	DRAWING NUMBER	
APPROVED	DD	ZC-R-TD-004	